MGR: STD'S
APPR. DATE 4-7-22
SUPERSEDES 1-43/6-21-01

1-43

POWER ENGINEERING & CONSTRUCTION INC.

GENERAL RULES & SPECIFICATIONS UG.

TRENCHING FOR UNDERGROUND CABLES

DENOTES LATEST REVISION

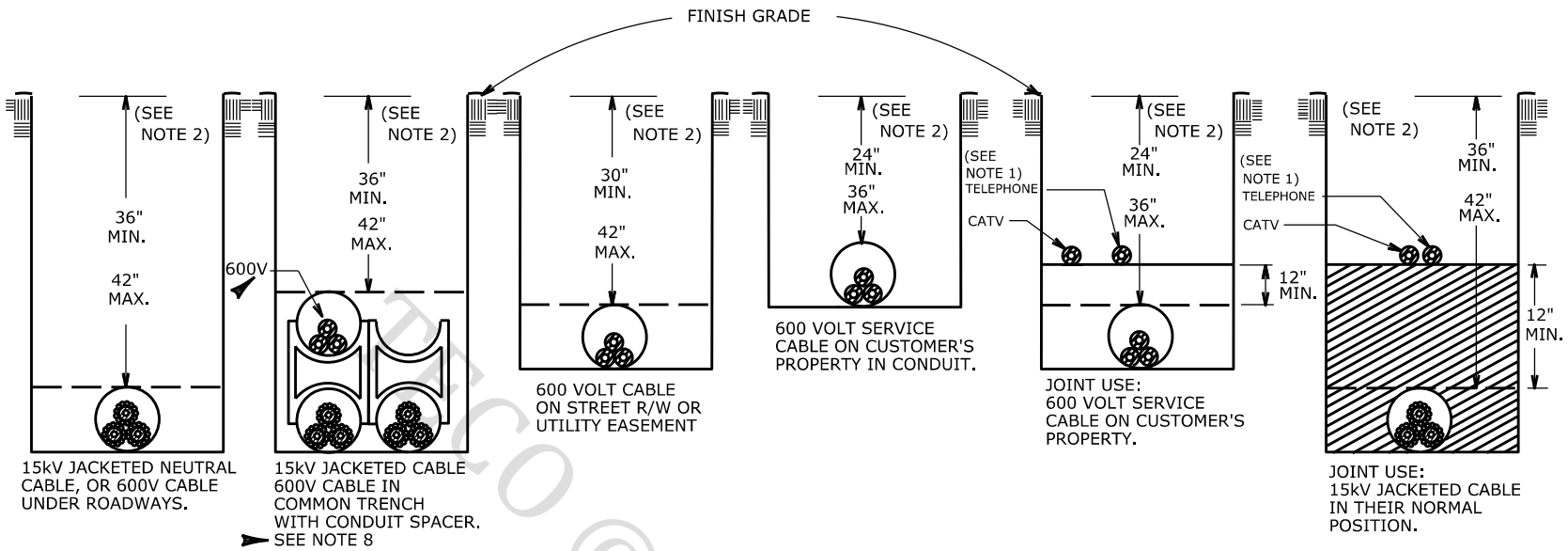

NOTES:

1. JOINT USE TRENCHING MAY ONLY BE USED FOR SPECIAL APPLICATIONS WITH PRIORAPPROVAL FROM A MANAGER E.D. FIELD CONSTRUCTION AND WITH ADVANCE COORDINATION AGREEMENT WITH ALL JOINT USERS.
2. DIMENSIONS SHOULD BE CALCULATED FROM FINISH GRADE OR THAT GRADE PROVIDED BY CONTRACTOR OR DEVELOPER.
3. ALL CABLES SHALL BE INSTALLED IN CONDUIT.
4. GALVANIZED STEEL CONDUIT SHALL BE USED WHEN JACKING CONDUIT UNDER EXISTING ROADWAYS. 4" AND 6" PVC CAN BE BORED UNDER ROADWAYS WITH APPROVAL FROM APPROPRIATE GOVERNMENT AGENCY.
5. MAXIMUM DEPTH TO TOP OF CONDUIT SHALL BE 42" ON ROAD RIGHT-OF-WAY UNLESS SPECIFIED BY TAMPA ELECTRIC PERSONNEL.
6. ALL SERVICES ON CUSTOMERS PROPERTY SHALL BE NO DEEPER THAN 36" (INCHES).
7. THE TABLE BELOW SHALL BE USED FOR SELECTING THE PROPER CONDUIT SIZE.
8. CONDUIT SPACERS SHALL BE INSTALLED ON ALL 4" AND 6" CONDUIT RUNS WITH THREE OR MORE CONDUITS IN THE SAME TRENCH. THEY SHALL BE SPACED APPROXIMATELY EVERY 5 FEET OR 4 SPACERS PER 20 FT SECTION. TIE WRAPS SHALL BE USED TO BIND EACH CONDUIT RUN TO THE CONDUIT SPACERS.

CONDUIT SIZE	15 kV PRIMARY CABLE	600V SEC./SVC. CABLE	600V STREET LIGHT CABLE
2"	1-#1/O AL	#2/0-AL, 1ø OR 3ø	#10 3/C-#4 STR.
3"		#4/0-AL, 1ø OR 3ø	
4"	3-#1/O AL	#500MCM AL, 1ø OR 3ø	
4"	3-#4/O AL		
6"	3-1000MCM AL		